TITLE:

LEV-C250T

FIRST ANGLE PROJECTION

IF IN DOUBT ASK

PROPRIETARY AND CONFIDENTIAL
THE INFORMATION CONTAINED IN THIS DRAWING IS THE SOLE PROPERTY OF OBERON PERFORMANCE LIMITED.
ANY REPRODUCTION IN PART OR AS A WHOLE WITHOUT THE WRITTEN PERMISSION OF OBERON PERFORMANCE LIMITED
IS PROHIBITED.

11 Havant Business Centre
Harts Farm Way
Havant
Hampshire
PO91 HU
UK

Tel: +44 02392 481 188
Fax: +44 02392 492 458
admin@oberon-performance.co.uk
Web: oberon-performance.co.uk

© Oberon Performance Limited

ITEM NO.	SKU	DESCRIPTION	QTY
1	LEV-C250T-1	Fully assembled standard blade.	1
2	LEV-C250T-2	Fully assembled airo blade.	1
3	LEV-C250T-3	Fully assembled custom blade.	1
4	FAST-CLIP-0011	8mm Circlip	1
5	FAST-CLIP-0012	10mm Circlip	1
6		Bike specific adaptor	

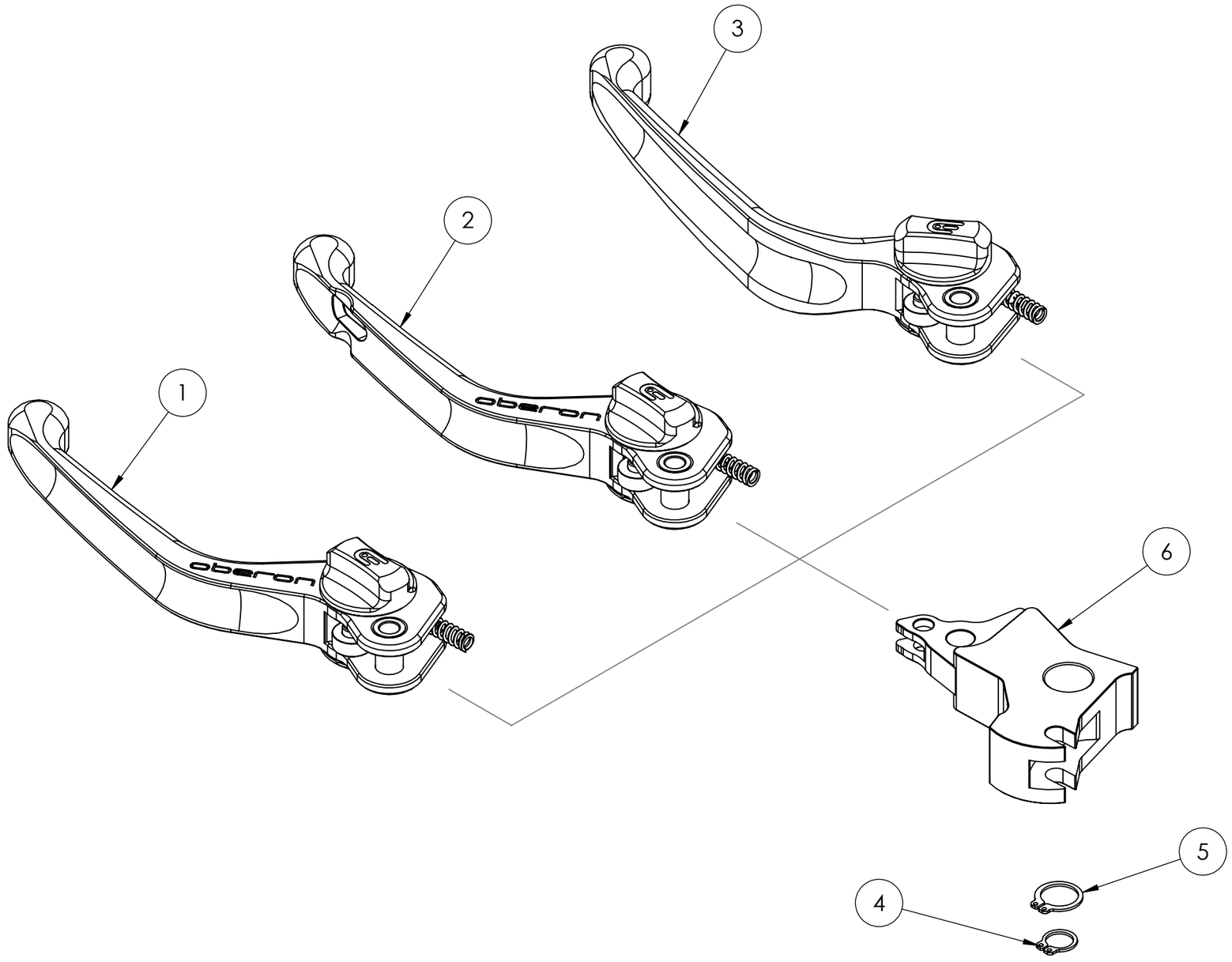

REVISIONS

REV	DESCRIPTION	DATE

DO NOT SCALE DRAWING

REVISION

	NAME	SIGNATURE	DATE
DRAWN			
CHK'D			
APPV'D			
MFG			
Q.A			

UNLESS OTHERWISE SPECIFIED:
DIMENSIONS ARE IN MILLIMETERS
TOLERANCES:
LINEAR: +/- 0.10
ANGULAR: +/- 0.5°

DEBURR AND BREAK SHARP EDGES

FINISH:

WEIGHT:

MATERIAL:

TITLE:

What's in the box.

DWG NO.

LEV-C250T

SCALE:1:2 | A3 | SHEET 1 OF 1